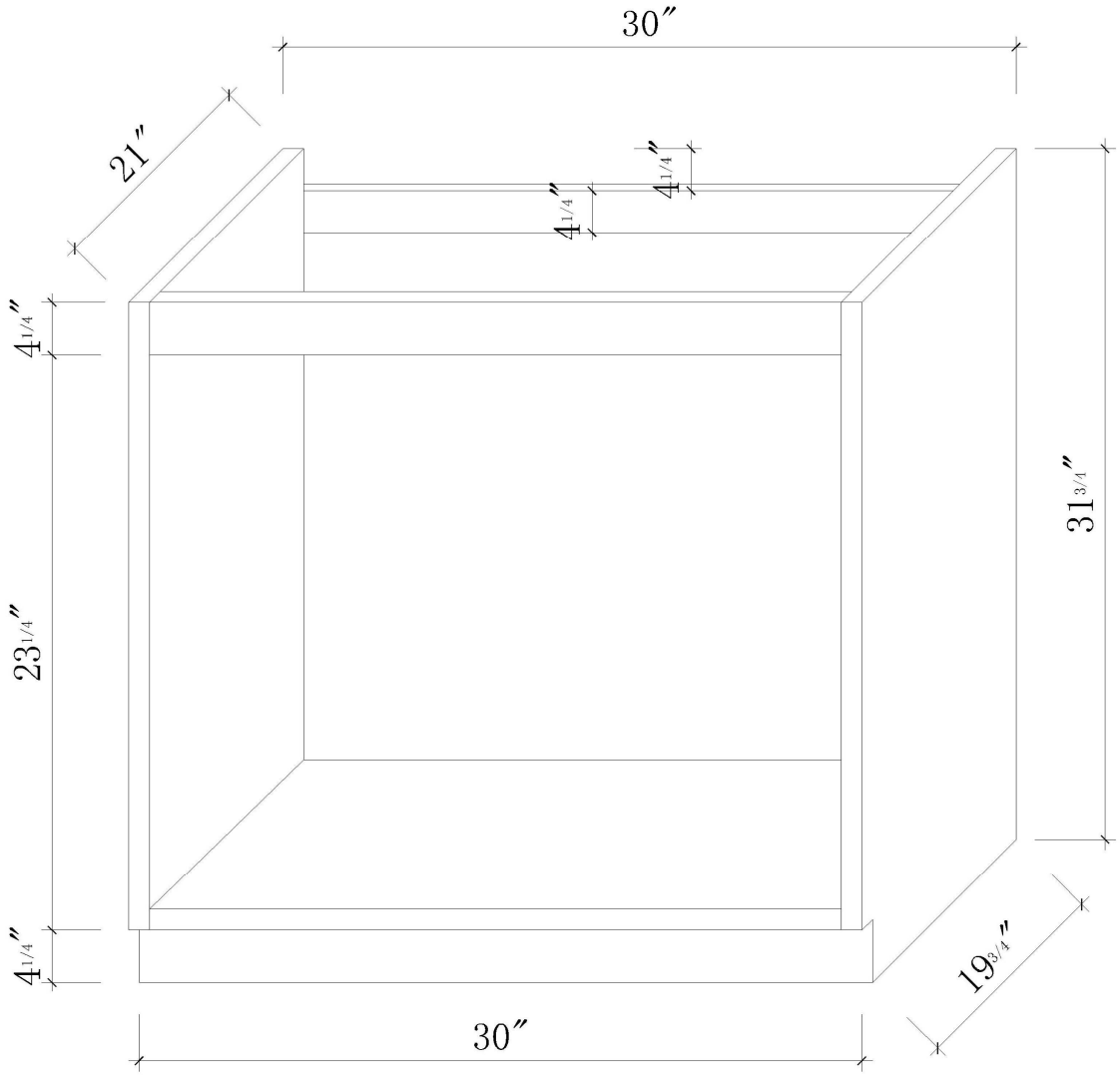

M3021p G3021p B3021p